TODO®

A Gardner Denver Product

TODO-MATIC® Couplings

Better by Design

For safe fluid handling

We are proud to present the TODO-MATIC® range of Dry-Break® couplings. More than 30 years of expertise has gone into their design and manufacture.

In sizes from 1" to 6" and a wide range of material options, TODO-MATIC® Dry-Break® couplings offer advanced fluid handling solutions for a diverse range of industries.

Major offshore exploration, chemical, pharmaceutical and petro chemical companies rely on TODO-MATIC® couplings to safely transfer their most aggressive or valuable products.

Designed for safe and easy use with minimum operator intervention. TODO-MATIC® couplings offer an unbeatable combination of technical, safety and performance features.

How it works

Turning the hose unit 15° clockwise locks the units together. The valves are still closed and are not opened until a further rotation of 90° has been performed and then the product flow is guaranteed. To close the valve and to unlock the units, reverse the procedure.

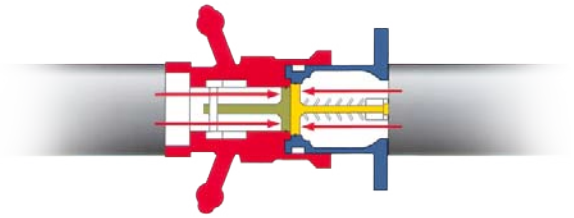

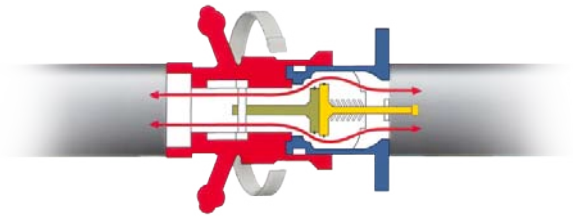

Features

- Valves open and close automatically on connection and disconnection.
- Simple single action operation, no levers or switches to operate.
- Valves are guaranteed closed prior to disconnection.
- Minimal residual loss on disconnection (e.g. maximum 0.35cc for 2" DN50).
- Will connect and disconnect under pressure and flow where necessary.
- Extremely reliable, very few moving parts.
- Robust construction, no external operational components.
- Available with selectivity system to prevent cross contamination.
- Reduces spillages to virtually zero.
- Dramatically improves both operational and fugitive emission performance.
- Reduces the possibility of human error in transfer operations.
- Improves efficiency.

TODO®
A Gardner Denver Product

Technical Details

Sizes:	1" (DN19 - DN32) to 6" (DN150).
Materials:	Aluminium, gunmetal and stainless steel 316L, other on request.
Seals:	FKM (Viton®), NBR (Nitrile), EPDM, Chemraz®, Kalrez®. Other materials on request.
Working pressure:	PN 10 - PN 25.
Test pressure:	Working pressure +50%.
Safety factor:	5:1.
End connections:	BSP- and NPT-threads. DIN-, ASA-, TW- and TTMA-flanges (available for both tank and hose units). Other threads and flanges on request.
Compatibility:	NATO STANAG 3756.

Viton® and Kalrez® is registered trademarks of DuPont Performance Elastomers.
Chemraz® is a registered trademark of Green-Tweed.

Flow capacity

TODO-MATIC® DRY-BREAK® couplings offer high flow capacity.

Media: water. Temperature: 20°C.

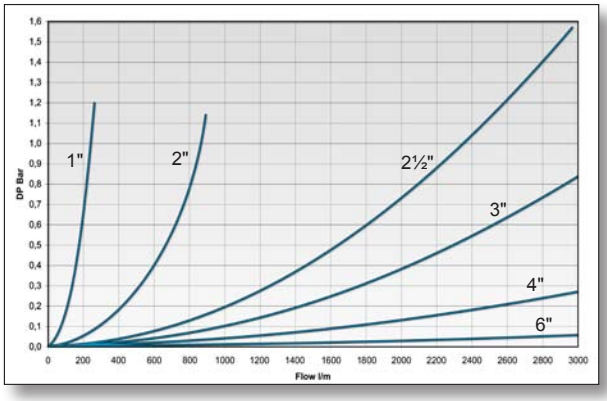

Pressure drop for 1" to 6", scale 0-3000 l/min.

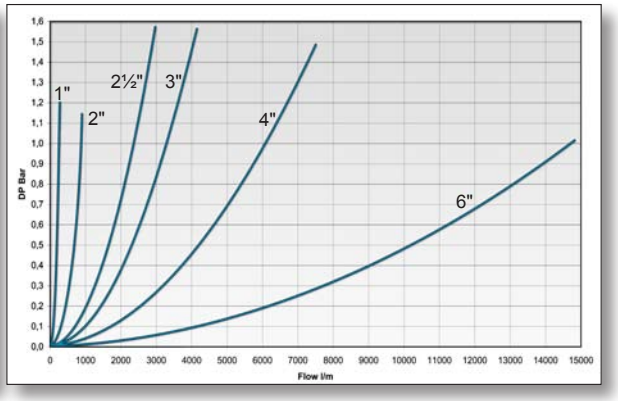

Pressure drop for 1" to 6", scale 0-15000 l/min.

Certificates / Approvals

- Vd-TÜV type approval, mark TÜ.AGG.162-93 towards ADR, RID, IMDG and VDI-rules 2440, part 3.3.1.3.
- CE-marked, European directives 97/23/EC (PED) and 94/9/EC (ATEX) compliant.
- TDT approval, mark TDT-UW-30/09 towards ADR/RID in Poland.
- Manufactured under EN ISO 9001:2000.
- Certified towards ISO 14001:2004 and OHSAS 18001:2007.
- Manufactured towards EN 13480 and EN 13445.

Better by Design

Size range, TODO-MATIC® Dry-Break

1" TODO-MATIC® Dry-Break (DN19 - DN32, Ø56 mm)

TODO-MATIC® Dry-Break® couplings in 1" size are designed for smaller bore applications where compact dimensions are required. One handed operation, high flow rate and minimal release on disconnection make TODO-MATIC® perfect for transferring high value or sensitive medias with confidence. The addition of selectivity to prevent product cross contamination expands the operational possibilities in manifold exchange applications.

2" TODO-MATIC® Dry-Break (DN40 - DN50, Ø70 mm)

Our 2" coupling size probably covers the most diverse selection of applications in the TODO-MATIC® family. Available in a range of material and connection configurations, TODO-MATIC® 2" is designed for rapid and safe transfers. Offshore chemical dosing, Pharmaceutical feedstock and aggressive chemical vapour transfer are just some of the challenging applications TODO-MATIC® couplings see on a daily basis.

2½" TODO-MATIC® Dry-Break (DN65 - DN80, Ø105 mm)

The 2½" TODO-MATIC® coupling is generally used in road tanker and aviation applications transferring a variety of liquids and vapours. Just like all TODO-MATIC® couplings, the 2½" is available in a full range of materials to offer compatibility with most applications. A strong integral swivel, ergonomic design and rugged construction ensure TODO-MATIC® couplings are equipped for the real world.

3" TODO-MATIC® Dry-Break (DN80, Ø119 mm)

A true 3" coupling, similar in size to the 2½" but with greater flow. Typically used for road and rail tank loading / discharge, in plant chemical transfers etc. Tough construction, ease of handling, no spillage and high flow made this coupling form the natural choice for N.A.T.O refuelling standardisation.

TODO®
A Gardner Denver Product

Size range, TODO-MATIC® Dry-Break

4" TODO-MATIC® Dry-Break (DN100, Ø164 mm)

Without exception, the most compact, light weight, high flow 4" self sealing coupling system available. Used extensively for offshore ship to rig transfers of fuels and drinking water, aviation fuel bunkering, rail tank loading / discharge, chemicals etc.

Rapid, positive connection and disconnection make TODO-MATIC® the standard for barge to ferry re-fuelling and multiple rail tank discharge.

6" TODO-MATIC® Dry-Break (DN150, Ø238 mm)

The same features and method of operation as the rest of the range make 6" TODO-MATIC® the ideal ship / barge to shore connection.

Much faster and safer than any flange coupling means not only environmental standards compliance but real turn around time savings. Full marine construction with rotating lifting loop as standard.

As with all TODO-MATIC® couplings, the 6" is equally suitable for flexible hose or loading arm applications.

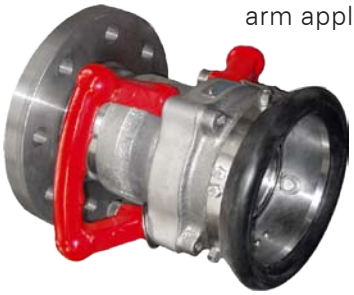

Hose unit with flange

All sizes of the hose unit are also available with flange.

Better by Design

Applications

- Road / Rail tanker loading / discharge
- ISO retrofit & new build
- IBC containers
- Offshore rig supply
- Pharmaceutical processing
- Vapour Recovery
- Ship to shore / ship / rig transfer
- Ship manifold exchange
- Bulk loading / discharge
- Paints & inks
- Marine refuelling
- Bitumen transfer
- Brewery
- Food feedstock
- Hazardous waste transfer
- Aviation bunkering
- Exchange manifolds
- Blending pits
- Rail locomotive refuelling
- Tank top / bottom loading
- etc..

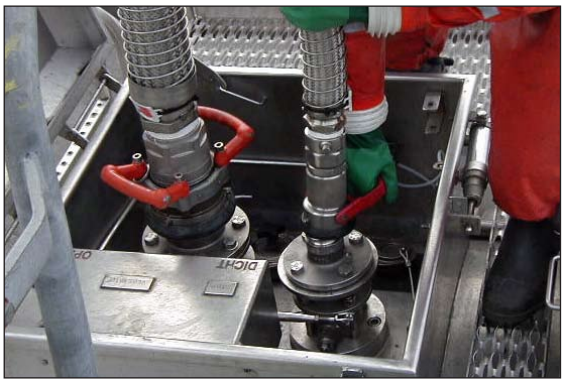

TODO®

A Gardner Denver Product

Better by Design

Safety Pressure Tight Cap

Designed to enhance operator safety & containment security in chemical & gas transport.

Pressure indicator, depressurization, customs / tamper seal feature, automatic locking, certified closure.

Manually lockable (with padlock). WP: PN 25. Sizes: 2” - 4”.

Dust Plugs and Dust Caps

Available in stainless steel, brass / gunmetal and aluminium. There are also versions availabe in rubber.

Dust plugs / caps should be used to prevent ingress of dirt or water. Sizes: 1” - 6”.

TODO®
A Gardner Denver Product

Selectivity

To avoid cross contamination by connecting a hose unit to the wrong tank unit.

Each unit has a number of selective positions, designated by a coded part number according to the coupling size.

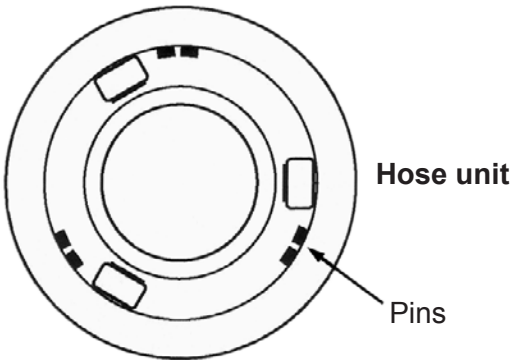

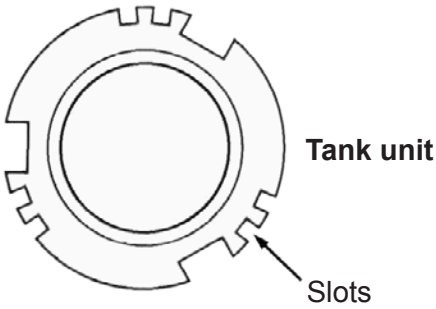

Specials / Accessories

Pressure relief valve, for tank unit

Dissipates trapped fluid pressure into hose unit without spillage, to allow easy connection.

TODO 4WD

Developed specially for the use of aggressive chemicals and uses a new patented valve mechanism. Easier to connect / disconnect. Less seal wear due to the use of advanced seating and coating technologies. Less total loss of fluid on disconnection. WP: PN 25.

Better by Design

Specials / Accessories

TODO-MATIC® for extremely corrosive media

Available in Hastelloy, other materials on request.

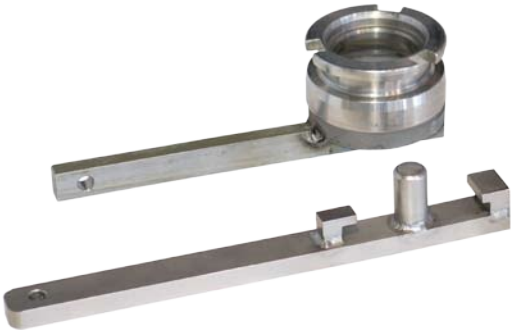

Tools for draining of hose and tank units

Hose unit with magnetic switch

The switch indicates if the hose unit is fully connected to a standard tank unit. Can be used to start pumps, activation of brakes on road tankers, etc.

Parking device

For safe and convenient storing of hose units.

1” foldable handle

TODO®
A Gardner Denver Product

Specials / Accessories

2” foldable handle mounted on the swivel

2” round handle

2½”-3” straight handle

4” round handle

Better by Design

TODO®
A Gardner Denver Product

TODO AB
Box 33, Industrigatan 2-4 ·
S-545 21 Töreboda · Sweden
Phone +46 506 19940 · Fax : +46 506 19944

EMCO WHEATON UK Limited
Channel Road · Westwood Industrial Estate
Margate, Kent CT9 4JR · UK
Phone +44 1843 221521 · Fax +44 1843 295444

EMCO WHEATON GmbH
Emcostraße 2-4 · 35274 Kirchhain · Germany
Phone +49 6422 84-0 · Fax +49 6422 5100

EMCO WHEATON USA, INC.
9111 Jackrabbit Road · Houston, Texas 77095 · USA
Phone +1 281 856-1300 · Fax +1 281 856-1325

EMCO WHEATON Corp.
2480 Bristol Circle · Oakville, Ontario L6H 5S1 · Canada
Phone +1 905 8298619 · Fax +1 905 8298620

GARDNER DENVER Inc.
306 Middletown Park Place, Suite D
Louisville, KY 40243 · USA
Phone +1 502 489 3884 · Fax +1 502 489 3882

www.todo.se
www.emcowheaton.com

assist@todo.se
assist@emcowheaton.com

GARDNER DENVER FRANCE SA
Immeuble Le Miroir, 15-17, Boulevard du Gal. de Gaulle
92120 Montrouge · France
Phone +33 146 1241-41 · Fax +33 146 1241-59

EMCO WHEATON ASIA PACIFIC
21 - 5F · IOI Business Park · Bandar Puchong Jaya
47100 Puchong Selangor · Malaysia
Phone +603 8075-7500/7900 · Fax +603 8075-4100

GARDNER DENVER INTERNATIONAL LTD.
PO Box 30804 · Diraz, Manama · Bahrain
Phone +973 17813187 · Fax +973 17813186

EMCO WHEATON GmbH
Branch Office CEE
Blue Danube Park, Objekt 60 · 2100 Korneuburg Austria
Phone +43 2262 64281-0 · Fax +43 2262 6428120

EMCO WHEATON GmbH Sp.z.o.o.
Oddzial w Polsce
ul. Królewska 57 · 30-081 Kraków · Poland
Phone +48 12 2934308 · Fax +48 12 2934309

EMCO WHEATON Regional Sales Office
PO Box 468 · Cross Lane, Tong, Bradford ·
West Yorkshire BD4 0SU · UK
Phone +44 1274 683131 · Fax +44 1274 651006